Venturi Tubes & Venturi Nozzles

Data sheet : **VENTURI/2012**

- **Classical Venturi Tubes**
- **Venturi Nozzles**
- **Calculation, Design and Manufacture to BS EN ISO 5167:1**
- **Fabricated from Plate or Machined from Bar/Forgings**
- **Flanged or Weld-In Construction**
- **Range of Material Grades**
- **Pipe Sizes from 50 mm to 1200 mm**
- **Calibration Service on Request**

General Description

There are two common types of Venturi tube - the Venturi Nozzle, and the Classical (Herschel) Venturi. Both feature a convergent inlet section and a divergent outlet section. The classical Venturi convergent section is a simple truncated cone, whereas for the Venturi nozzle, the inlet contour matches that of the ISA 1932 flow nozzle.

The major advantage of the Venturi over orifice plates and flow nozzles is in the area of pressure recovery. Typically, unrecovered pressure is in the region of 10 - 30% of measured DP as opposed to 40 - 90% for an orifice plate (depending on beta ratio). Although the cost of a Venturi can be comparatively high, where pumping costs are important the initial outlay can be warranted.

Another advantage of the Classical Venturi over the other differential pressure producers is that the requirements for upstream and downstream straight pipe lengths are somewhat less onerous.

Materials

Venturi tubes and Venturi nozzles can be supplied in a wide range of material grades.

Machined devices can be manufactured from barstock, or forgings. Standard materials include ASTM A182 F316 & F304 Stainless Steels, ASTM A182 F11 & F22 Chromium Steels and ASTM A105 Carbon Steel

Standard materials for fabricated devices are ASTM A240 316/L Stainless Steel and Carbon Steel.

We are experienced in machining and welding exotic materials, including Hastelloy®, Inconel®, Incoloy® and Duplex Stainless Steels.

Incoloy, Inconel and Monel and are trademarks of INCO Alloys International Inc.

Hastelloy is a trademark of Haynes International Inc.

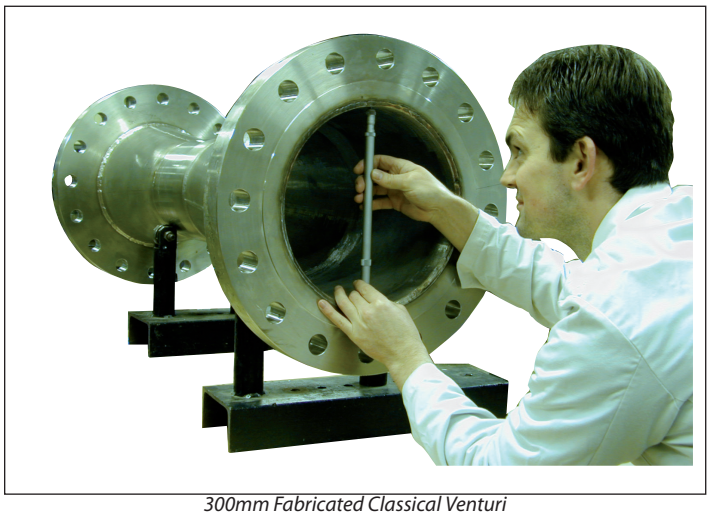

300mm Fabricated Classical Venturi

Dimensions

The basic design of the two types of device are shown below.

CLASSICAL VENTURI (MACHINED)

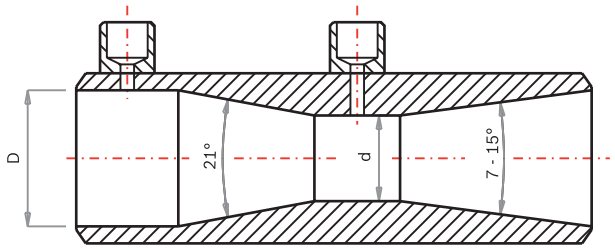

VENTURI NOZZLE (MACHINED)

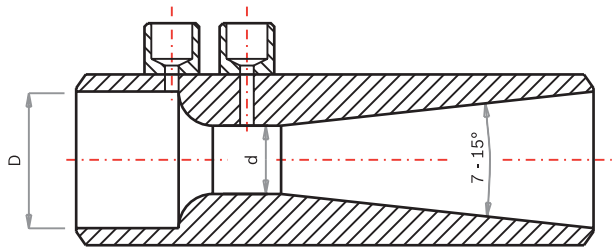

End Connections

Venturis are available with ends prepared for welding into the pipeline, or fitted with flanges.

END PREPARED FOR WELDING

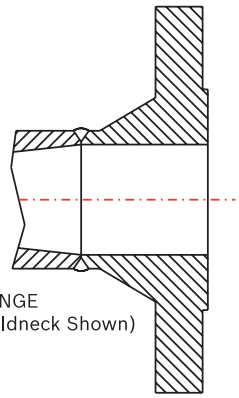

FLANGE (Weldneck Shown)

Rototherm™

Pressure Tappings

Venturis can be supplied with a wide variety of pressure tappings, including threaded connections, socket weld connections and welding nipples.

We can also supply isolation valves, condensate chambers and manifolds, as the application demands.

Examples of Pressure Tappings

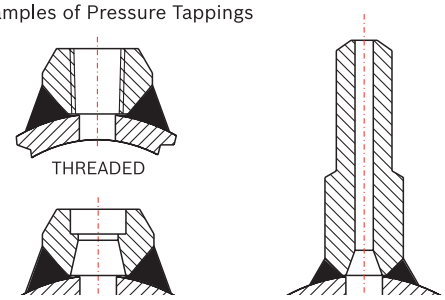

Required Straight Lengths

Upstream straight pipe requirements for classical Venturi tubes are less than those required for orifice plates, flow nozzles and Venturi nozzles - the convergent portion of the classical Venturi is designed to obtain a more uniform velocity profile at the throat of the device.

The lengths shown in the table below, in terms of pipe diameters, are measured from the plane of the upstream pressure tapping.

Fittings located more than four throat diameters downstream of the plane of the throat tapping do not affect the accuracy of the measurement.

Diameter Ratio β	Single 90º bend	Two or more 90º bendsin the same plane	Reducer 3D to D over a length of 3.5D	Expander 0.75D over a length of D	Full bore ball or gate valve fully open
0.30	8	8	2.5	2.5	2.5
0.35	8	8	2.5	2.5	2.5
0.40	8	8	2.5	2.5	2.5
0.50	9	10	5.5	2.5	3.5
0.60	10	10	8.5	3.5	4.5
0.70	14	18	10.5	5.5	5.5
0.75	16	22	11.5	6.5	5.5
0.75	4.5	4.5	11.5	6.5	5.5

All dimensions are in mm

Limitations

Pipe size and Reynolds number limitations are shown in the table below, in accordance with BS EN ISO 5167:1.

Device	Pipe Inside Diameter (mm)		Reynolds Number	
	Min	Max	Min	Max
Fabricated Venturi	200	1200	2×10^5	2×10^6
Machined Venturi	50	250	2×10^5	1×10^6
Venturi Nozzle	65	500	1.5×10^5	2×10^6

Unrecovered Pressure Loss

The graph below shows the advantage of Venturi tubes and Venturi nozzles over orifice plates and flow nozzles. Pressure loss is expressed as a percentage of the measured differential pressure.

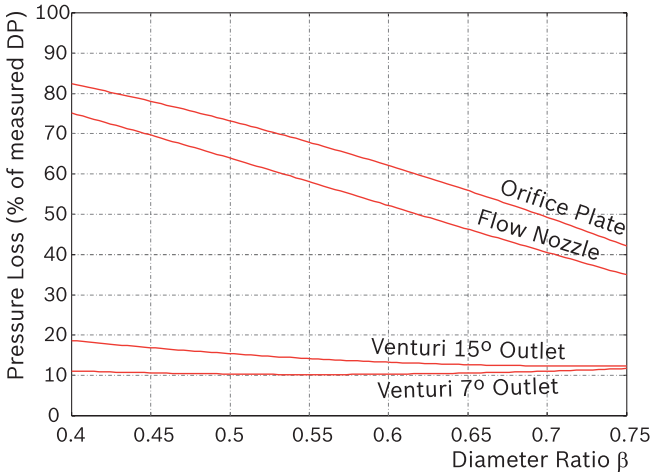

Special Requirements

For applications requiring high accuracy flow measurement, Venturi tubes can be individually calibrated, using water, air or natural gas, to obtain accurate discharge coefficients for the device over a range of Reynolds numbers.

We can also offer 'in-house' testing including dye-penetrant inspection, hydrostatic pressure testing, radiographic inspection, magnetic particle inspection and positive material identification.

ASME IX welding procedures and qualifications in common and exotic materials are also available. Various heat treatments, including NACE MR 0175, can also be provided.

ISO9001:2015

Rototherm™

Excellence the World can Measure™

British Rototherm Company Limited
Kenfig Industrial Estate, Margam, Port Talbot SA13 2PW United Kingdom

T: +44 (0) 1656 740 551 **F:** +44 (0) 1656 745 915
E: sales@rototherm.co.uk **W:** www.rotothermgroup.com